Unit 6.5 Line Segments

07/10/2021

To be able to work out length and midpoints of line segments

Connect Act emonstrate

What is the value of:

Q1) $sin(60)$

Q2) $tan(45)$

Q3) $cos(30)$

Q4) $cos(90)$

Q5) $sin(90)$

Find x $(2dp)$:

Q1)

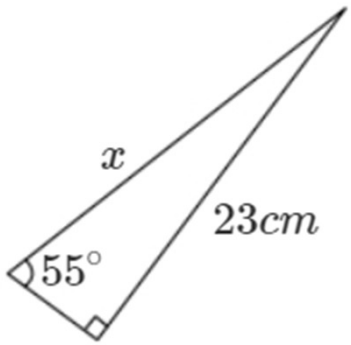

Find x $(2dp)$:

Q1)

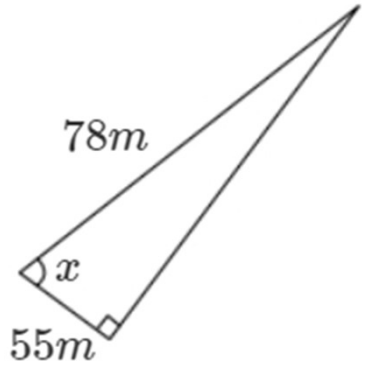

Find x $(2dp)$:

Q1)

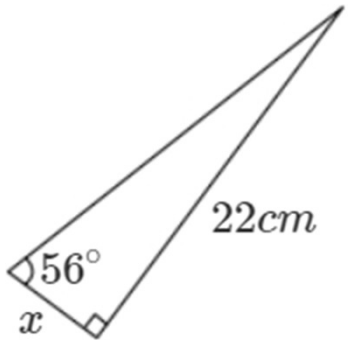

Connect | **Self Assess** with Red Pens | Demonstrate | Consolidate

What is the value of

Q1) $sin(60)$

Q2) $tan(45)$

Q3) $cos(30)$

Q4) $cos(90)$

Q5) $sin(90)$

Q1) $\frac{\sqrt{3}}{2}$

Q2) 1

Q3) $\frac{\sqrt{3}}{2}$

Q4) 0

Q5) 1

Find x $(2dp)$:

Q1)

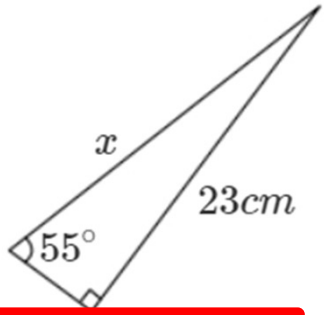

$x = 28.08cm$

Find x $(2dp)$:

Q1)

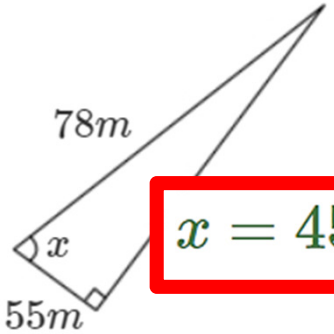

$x = 45.16°$

Find x $(2dp)$:

Q1)

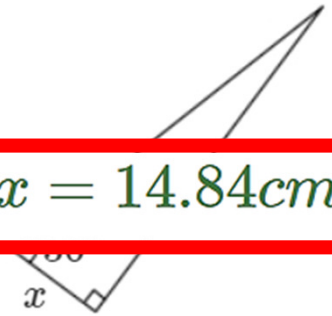

$x = 14.84cm$

Key point

A **line segment** has a start point and an end point.
The midpoint of a line segment is the point exactly in the middle of the line segment.

Key point

The coordinates of the midpoint of a line segment are

$$\left(\frac{x_1+x_2}{2}, \frac{y_1+y_2}{2}\right)$$

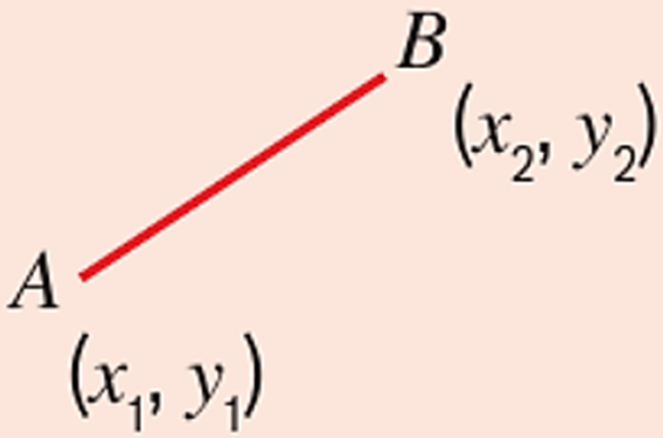

Connect | **Activate** | Demonstrate | Consolidate

I DO → WE DO → YOU DO

Write down the coordinates of the midpoint of each line segment

i $A(6, 0)$ and $B(8, 4)$

ii $C(2, 9)$ and $D(9, 2)$

iii $E(3, 8)$ and $F(-1, 6)$

a

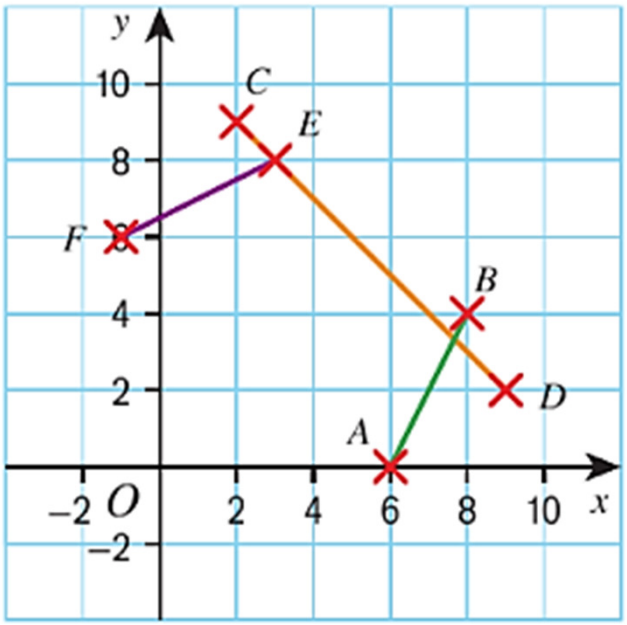

a

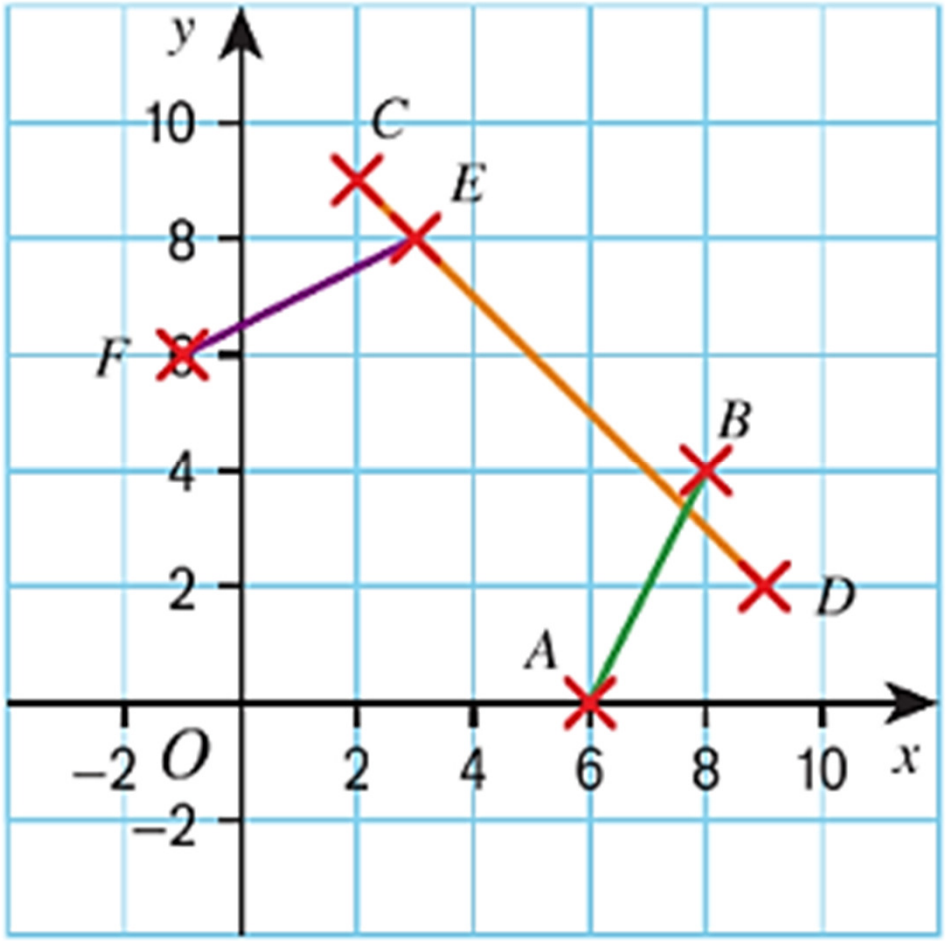

i (7, 2) **ii** (5.5, 5.5) **iii** (1, 7)

Key point

When two lines are **perpendicular**, the product of the gradients is -1.

When a graph has gradient m, a graph perpendicular to it has gradient $\frac{-1}{m}$

12 **Reasoning** Write down the gradient of a line perpendicular to

a $y = 3x - 1$ **b** $y = -\frac{1}{4}x + 2$ **c** $3y = 2x + 7$

Length of a segment

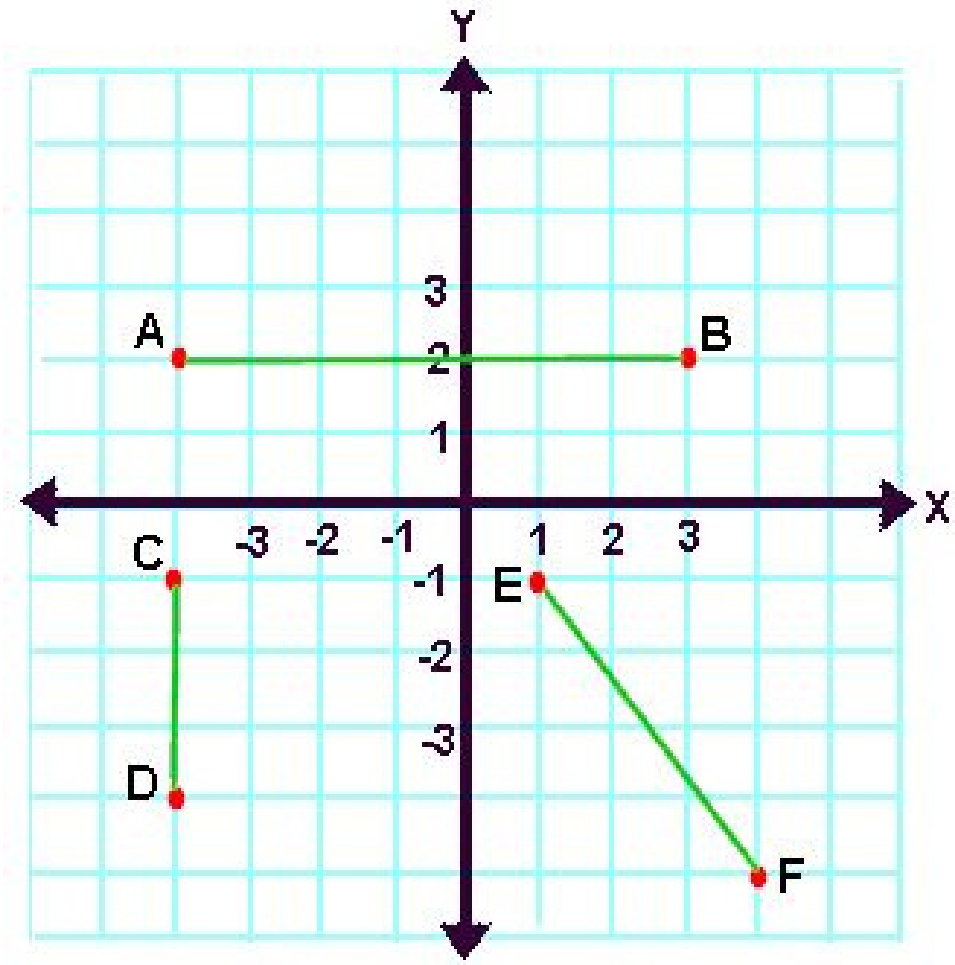

Point **A** (6, 4) **B** (11, 18)

Find the distance of line **AB**.

Length of a segment

Point **A** (6, 4) **B** (11, 18)

Find the distance of line **AB**.

MINI WB | MINI WHITEBOARD | **Activate** | Demonstrate | Consolidate

I DO → YOU DO

Point **C** (−2, 5) **D** (7, −1)

Find the distance of line **CD**.

Point **E** (8, −13) **F** (−7, −6)

Find the distance of line **EF**.

Length of a segment

⑤

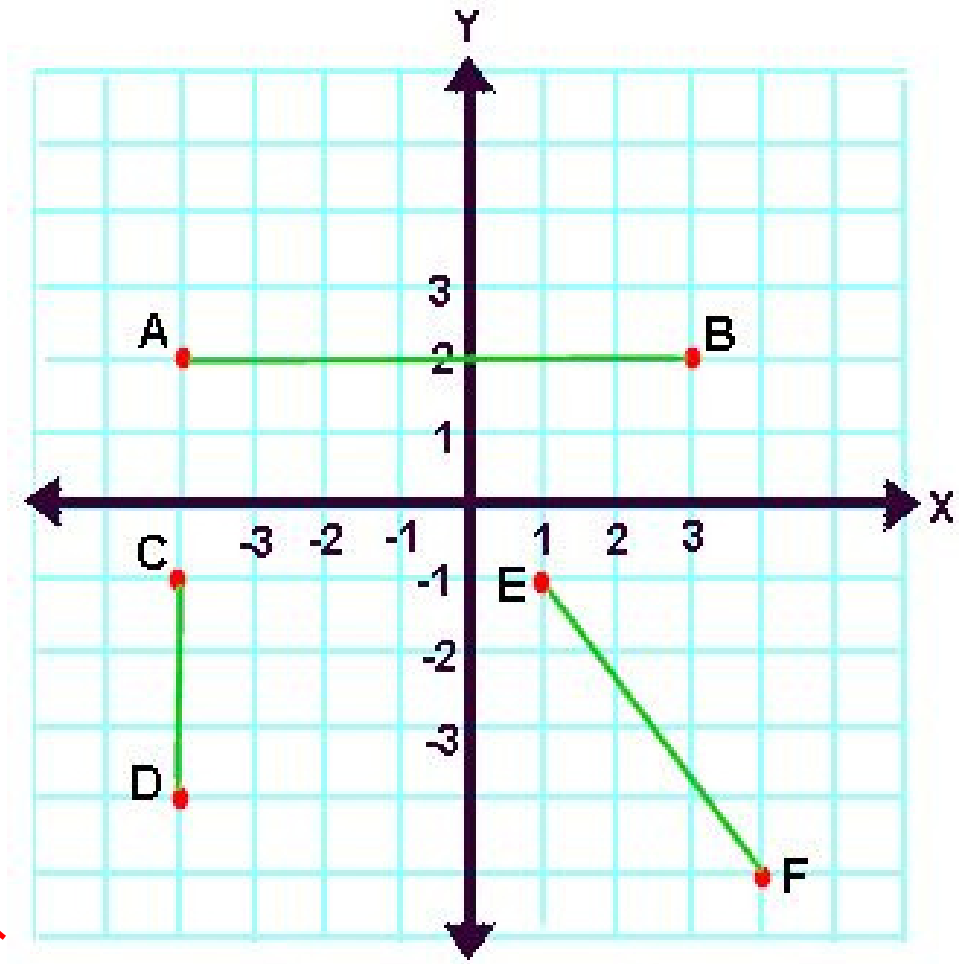

N) Point **A** (6, 4) **B** (11, 18)
Find the distance of line **AB**.

14.9

O) Point **C** (−2, 5) **D** (7, −1)
Find the distance of line **CD**.

10.8

P) Point **E** (8, −13) **F** (−7, −6)
Find the distance of line **EF**.

16.6

Problem-solving Work out the midpoint of a line segment PQ, where

a P is (0, 1) and Q is (3, 10)

b P is (2, 3) and Q is (6, –5)

c P is (–3, 3) and Q is (7, –2)

d P is (–7, –4) and Q is (5, 0)

8 Use Pythagoras' theorem to work out the length of the line segment with end points

a $A(-3, 1)$ and $B(0, -1)$

b $C(-4, -1)$ and $D(2, 7)$

c $E(-5, 3)$ and $F(8, -1)$

Problem-solving Work out the midpoint of a line segment PQ, where

a P is (0, 1) and Q is (3, 10)

b P is (2, 3) and Q is (6, –5)

c P is (–3, 3) and Q is (7, –2)

d P is (–7, –4) and Q is (5, 0)

a (1.5, 5.5) **b** (4, –1) **c** (2, 0.5) **d** (–1, –2)

8 Use Pythagoras' theorem to work out the length of the line se

a

b $C(-4, -1)$ and $D(2, 7)$

c $E(-5, 3)$ and $F(8, -1)$

8 **a** 3.6 (1 d.p.) **b** 10 **c** 13.6 (1 d.p.)

12 **Reasoning** Write down the gradient of a line perpendicular to

a $y = 3x - 1$ **b** $y = -\frac{1}{4}x + 2$ **c** $3y = 2x + 7$

12 **a** $-\frac{1}{3}$ **b** 4 **c** $-\frac{3}{2}$

13 **Problem-solving** Find the equation of a line that is

a perpendicular to the line with equation $x + y = 6$ and passes through the point $(-3, -7)$

b perpendicular to the line with equation $3y = 2x + 7$ and passes through the point $(-4, 1)$

Exam-style question

14 $ABCD$ is a rhombus.

The coordinates of A are $(-2, 6)$.
The equation of the diagonal BD is $y = 2x$.
Find an equation of the diagonal AC. **(4 marks)**

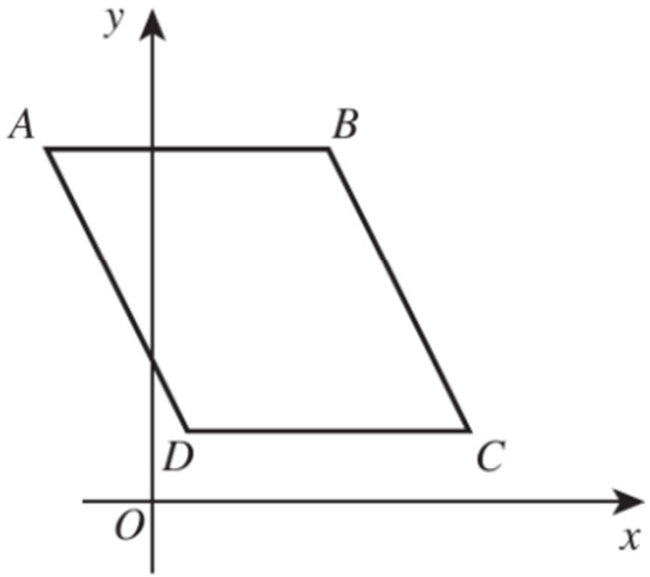

Exam tip

State any knowledge that you use. For example, what do you know about the diagonals of a rhombus?

13 **Problem-solving** Find the equation of a line that is

a perpendicular to the line with equation $x + y = 6$ and passes through the point $(-3, -7)$

x, y

b perpendicular to the line with equation $3y = 2x + 7$ and passes through the point $(-4, 1)$

x, y

a) $x + y = 6$

$y = -x + 6$

$m = -1$

perpendicular $m = 1$

$-7 = (-3) + c$

$c = -4$

$\boxed{y = x - 4}$

(b) $3y = 2x + 7$

$y = \frac{2}{3}x + \frac{7}{3}$

perpendicular $m = -\frac{3}{2}$

$y = mx + c$

$1 = \left(-\frac{3}{2}\right)(-4) + c$

$1 = 6 + c$

$c = 1 - 6$

$c = -5$

$\boxed{y = -\frac{3}{2}x - 5}$

Connect | Self Assess | Demonstrate

Exam-style question

14 *ABCD* is a rhombus.

The coordinates of *A* are (−2, 6).

The equation of the diagonal *BD* is $y = 2x$.

Find an equation of the diagonal *AC*. **(4 marks)**

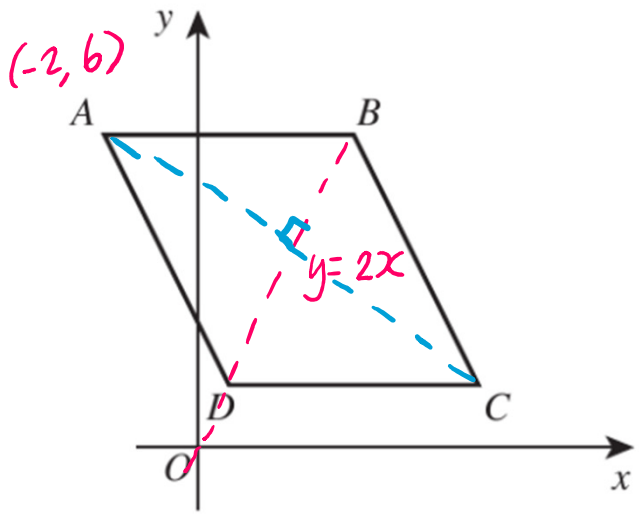

Exam tip

State any knowledge that you use. For example, what do you know about the diagonals of a rhombus?

$AC \perp BD$

$m = -\frac{1}{2}$ $\quad$ $m = 2$

AC Basically $m = -\frac{1}{2}$ through $(-2, 6)$

x, y

$y = mx + c$

$6 = \left(-\frac{1}{2}\right)(-2) + c$

$6 = 1 + c$

$c = 6 - 1$

$c = 5$

$$\boxed{y = -\frac{1}{2}x + 5}$$

Connect | **Self Assess** with Red Pens | **Demonstrate** | Consolidate

13 **Problem-solving** Find the equation of a line that is

a perpendicular to the line with equation $x + y = 6$ and passes through the p

b perpendicular to the line with equation $3y = 2x + 7$ and passes through the point $(-4, 1)$

13 a $y = x - 4$ **b** $y = -\frac{3}{2}x - 5$

Exam-style question

14 $ABCD$ is a rhombus.

The coordinates of A are $(-2, 6)$.
The equation of the diagonal BD is $y = 2x$.
Find an equation of the diagonal AC. **(4 marks)**

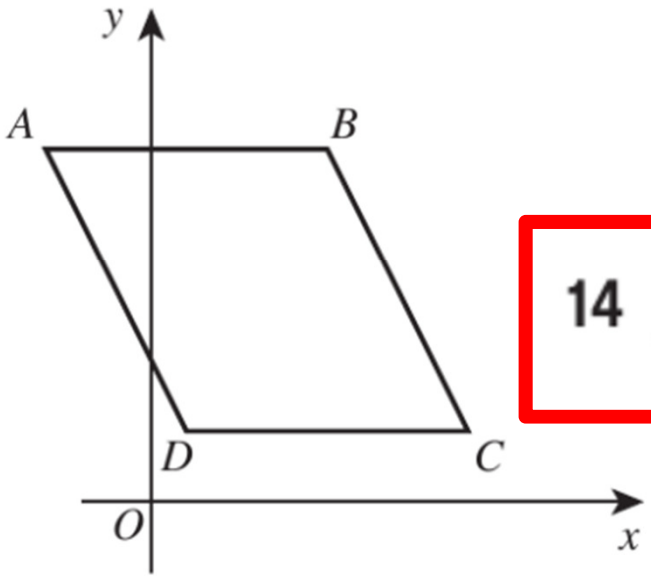

Exam tip

State any knowledge that you use. For example, what do you know about the diagonals of a rhombus?

14 $y = -\frac{1}{2}x + 5$